AF111 LVDT

The AF111 range of high accuracy LVDT displacement transducers have been designed primarily for use in the ratiometric configuration and have a compact size, with stroke lengths from 5mm to 150mm. Suitable for clamp mounting, the AF111 range have a threaded, unguided core assembly to simplify installation. Suited to numerous industrial applications, such as vehicle research, test rigs and OEM machinery.

PERFORMANCE

Electrical stroke E	**mm**	***5***	***15***	***25***	***50***	***75***	***100***	***125***	***150***
	±	***2.5***	***7.5***	***12.5***	***25.0***	***37.5***	***50.0***	***62.5***	***75.0***
Input voltage and frequency		1 to 10VRMS at 400Hz to 12.5kHz (sinewave)							
Insulation resistance		Greater than 100MΩ at 500Vdc							
Operational temperature	**°C**	-35 to + 125							
Storage temperature	**°C**	-55 to + 135							
Vibration		RTCA/DO - 160C, Section 8, Fig 8 - 1 Curve C (Random), 10 - 2000Hz, 4.12g rms							
		RTCA/DO - 160C, Section 8, Fig 8 - 3 Curve L (Sine), 10 - 2000Hz, 3g rms							
Environmental protection		IP66							

RECOMMENDED MODE

a.c. operation - High accuracy ratiometric mode - specification at 3VRMS, 2.5kHz @ 20°C unless stated otherwise

Electrical output R proportional to position		$R = \frac{Va - Vb}{Va + Vb}$							
Electrical output R at extremes from null	**± 1% total stroke**	0.3	0.3	0.4	0.4	0.6	0.6	0.6	0.6
Non-linearity	**± % total stroke**	0.25	0.25	0.25	0.25	0.25	0.125	0.125	0.125
Secondary coil output voltage		3.3VRMS maximum							
Input impedance		Greater than 300Ω							
Load resistance (per coil)		Greater than 50kΩ (non reactive)							
Temperature error (maximum)	**% total stroke/°C**	0.0012	0.0012	0.0012	0.0018	0.0018	0.0035	0.0030	0.0030

a.c. operation - Lower accuracy differential mode - typical specification at 3VRMS, 2.5kHz @ 20°C unless stated otherwise

Non-linearity		± 0.30% total stroke							
Sensitivity (in phase)	**mV/V/mm**	80.0	44.0	39.0	20.0	18.0	13.0	10.5	9.0
Phase shift (fully extended)	**°**	20	20	15	15	5	5	5	5
Input impedance (minimum)		Greater than 300Ω							
Null voltage % total stroke output		1.0	1.0	1.0	0.5	0.5	0.5	0.5	0.5

OUTPUT SCHEMATICS

Ratiometric configuration

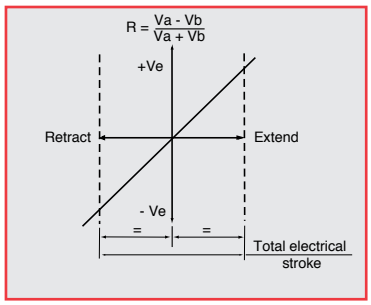

Differential configuration

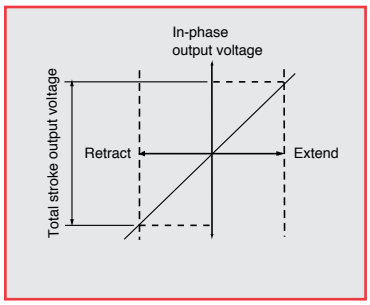

DIMENSIONS

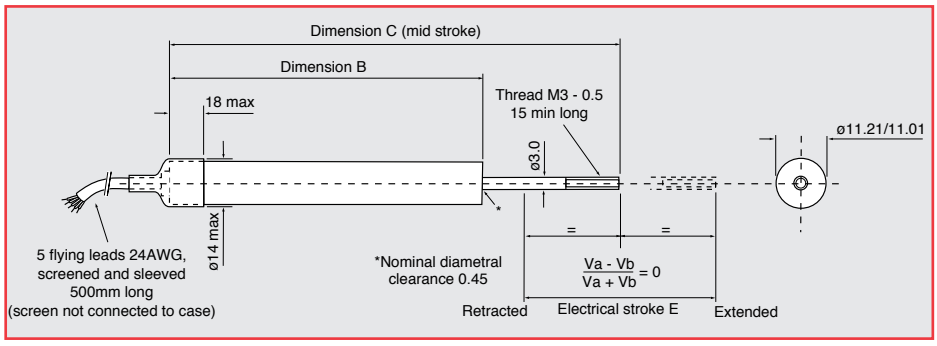

Electrical stroke E	**mm**	***5***	***15***	***25***	***50***	***75***	***100***	***125***	***150***
Mechanical stroke M (non captive shaft)	**mm**	***9***	***19***	***29***	***54***	***79***	***104***	***129***	***154***
Dimension B	**mm**	55	65	80	105	150	175	215	240
Dimension C	**mm**	75	90	110	147.5	205	242.5	295	332.5
Weight (maximum)	**g**	45	50	55	67	90	100	120	140

ELECTRICAL CONNECTIONS

5 flying leads 24AWG, screened and sleeved 500mm long

Ratiometric connection configuration

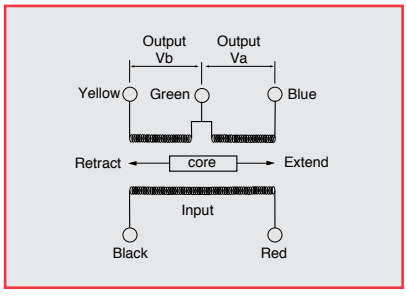

Differential connection configuration

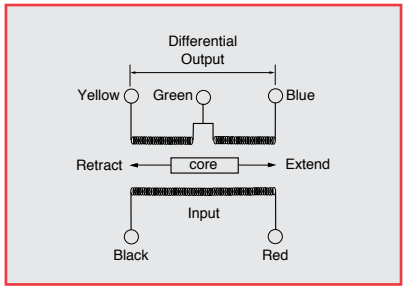

Phasing notes

i) High accuracy Ratiometric mode

When the LVDT is connected to the SCM100 module, there is no requirement to determine the phasing of the output to the input. The high performance circuit of the SCM100 determines all relevant parameters and supplies dc outputs as shown on page 8.

(ii) Lower accuracy Differential mode

In this mode, the LVDT is used without the SCM100 module and could be connected to a third party signal conditioning module. With the black and blue leads common, the output on the yellow lead will be in-phase with the red lead (input) as the shaft retracts from the null position.

AVAILABILITY

Normally available from stock

ORDERING CODES

AF111/.....

Electrical stroke (total) mm

e.g. **AF111/125** has 125mm total stroke

AF145 LVDT

The AF145 range of high accuracy LVDT displacement transducers have been designed primarily for use in the ratiometric configuration, and have a compact size, with stroke lengths from 5mm to 150mm. The AF145 has self-aligning rod end bearing mounting, with an outer sliding sleeve which protects the movable core whilst enhancing the rigidity of the transducer during operation. Suited to harsh automotive and industrial environments.

PERFORMANCE

Electrical stroke E	**mm**	***5***	***15***	***25***	***50***	***75***	***100***	***125***	***150***
	±	***2.5***	***7.5***	***12.5***	***25.0***	***37.5***	***50.0***	***62.5***	***75.0***
Input voltage and frequency		1 to 10VRMS at 400Hz to 12.5kz (sinewave)							
Insulation resistance		Greater than 100MΩ at 500Vdc							
Operational temperature	**°C**	-35 to +125							
Storage temperature	**°C**	-55 to +135							
Vibration		RTCA/DO - 160C, Section 8, Fig 8 - 1 Curve C (Random), 10 - 2000Hz, 4.12g rms							
		RTCA/DO - 160C, Section 8, Fig 8 - 3 Curve L (Sine), 10 - 2000Hz, 3g rms							
Environmental protection		IP66							

RECOMMENDED MODE

a.c. operation - High accuracy ratiometric mode - specification at 3VRMS, 2.5kHz @ 20°C unless stated otherwise

Electrical output R proportional to position	$R = \frac{Va - Vb}{Va + Vb}$								
Electrical output R at extremes from null ±1% total stroke	0.3	0.3	0.4	0.4	0.6	0.6	0.6	0.6
Non-linearity ±% total stroke	0.25	0.25	0.25	0.25	0.25	0.125	0.125	0.125
Secondary coil output voltage	3.3VRMS maximum							
Input impedance	Greater than 300Ω							
Load resistance (per coil)	Greater than 50kΩ (non reactive)							
Temperature error (maximum) % total stroke/°C	0.0012	0.0012	0.0012	0.0020	0.0020	0.0030	0.0030	0.0030

a.c. operation - Lower accuracy differential mode - typical specification at 3VRMS, 2.5kHz @ 20°C unless stated otherwise

Non-linearity	±0.30% total stroke							
Sensitivity (in phase) mV/V/mm	80.0	44.0	39.0	20.0	18.0	13.0	10.5	9.0
Phase shift (fully extended) °	20	20	15	15	5	5	5	5
Input impedance (minimum) Ω	Greater than 300Ω							
Null voltage % total stroke output	1.0	1.0	1.0	0.5	0.5	0.5	0.5	0.5

OUTPUT SCHEMATICS

Ratiometric configuration

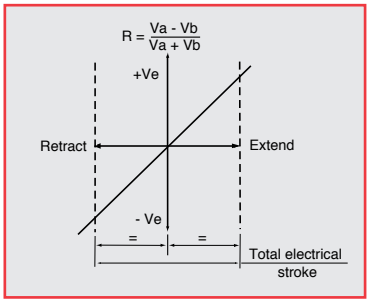

Differential configuration

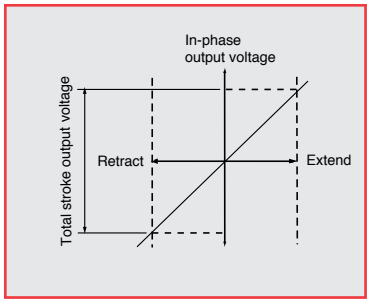

DIMENSIONS

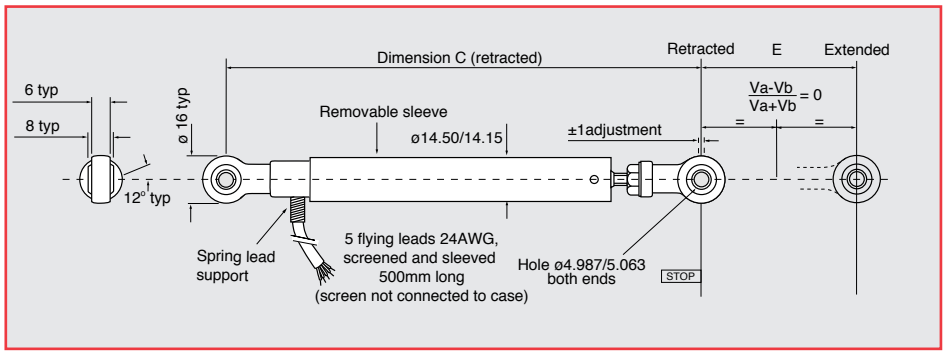

Electrical stroke E	**mm**	***5***	***15***	***25***	***50***	***75***	***100***	***125***	***150***
Mechanical stroke M (non captive shaft)	**mm**	***9***	***19***	***29***	***54***	***79***	***104***	***129***	***154***
Dimension C retracted	**mm**	100	110	125	150	195	220	260	285
Weight (maximum)	**g**	65	80	90	115	155	175	200	220

ELECTRICAL CONNECTIONS

5 flying leads 24AWG, screened and sleeved 500mm long.

Ratiometric connection configuration

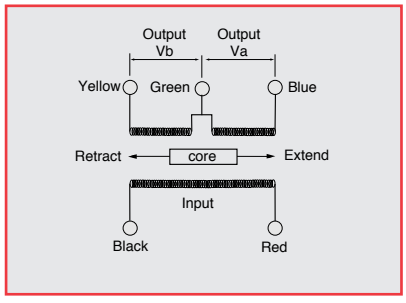

Differential connection configuration

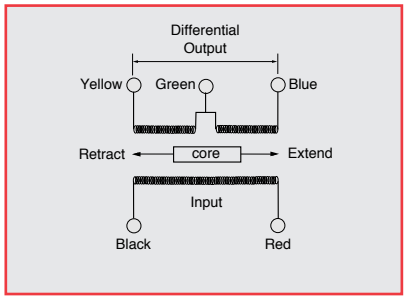

Phasing notes

i) High accuracy Ratiometric mode

When the LVDT is connected to the SCM100 module, there is no requirement to determine the phasing of the output to the input. The high performance circuit of the SCM100 determines all relevant parameters and supplies dc outputs as shown on page 8.

(ii) Lower accuracy Differential mode

In this mode, the LVDT is used without the SCM100 module and could be connected to a third party signal conditioning module. With the black and blue leads common, the output on the yellow lead will be in-phase with the red lead (input) as the shaft retracts from the null position.

AVAILABILITY

Normally available from stock

ORDERING CODE

AF145/.....

Electrical stroke (total) mm

e.g. **AF145/100** has 100mm total stroke

LVDT DISPLACEMENT TRANSDUCERS
OPERATION AND USE

What is an LVDT?

LVDT is the acronym for Linear Variable Differential Transformer. The LVDT is a non-contacting linear displacement transducer which works on a principle of mutual inductance, producing an electrical signal which is proportional to a separate moving core (or armature). The fundamental advantages of LVDT transducers are their high degree of robustness, infinite resolution and ability to operate at high temperatures and in extreme environments.

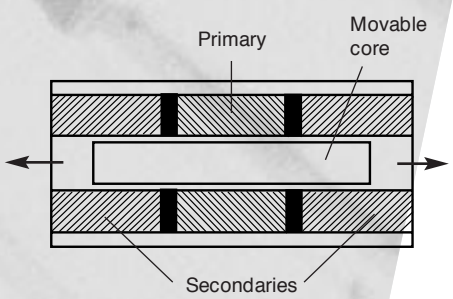

Fig A) LVDT cross sectional diagram

LVDT principle

The LVDT consists of a primary winding, two secondary windings and a separate, movable high permeability core (Fig A). When the primary winding is driven with an a.c. voltage a corresponding a.c. voltage is induced in the two secondary windings, in proportion to the position of the movable core. The secondary windings are connected in series opposition to form the transformer secondary (Fig B).

When the core is centered with respect to the two secondary windings, they will have the same magnitude of induced output voltages, but the polarity (or phasing) will be opposite.

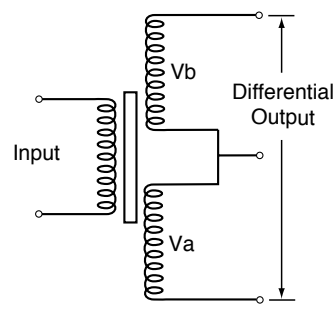

Fig B) LVDT differential output connection

When the core is displaced from this null position, the output amplitude on one secondary coil (Va) increases, while the output amplitude in the other coil (Vb) decreases (Fig C). These voltages can be used individually or combined to produce an output signal proportional to position, dependant upon the method of demodulation used. The two main methods used are described below.

Individual output voltage schematic

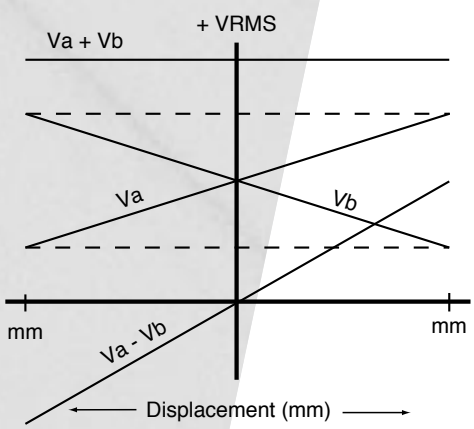

Fig C)

Ratiometric operation

A high accuracy method of translating the LVDT output is to measure the secondary voltages independently to generate a ratio of the difference divided by the sum of these values.

$$\text{Ratio} = \frac{Va - Vb}{Va + Vb} \qquad \text{(Fig. D)}$$

This configuration is commonly referred to as ratiometric operation and will provide much higher system accuracy performance than operation in the differential mode.

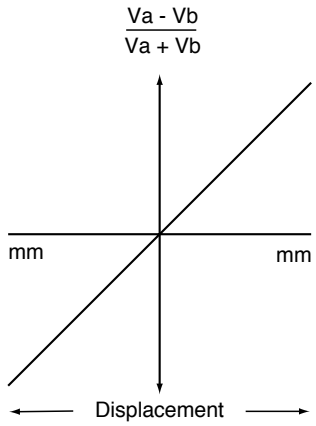

Fig D)

Ratiometric operation provides:

- Improved immunity to LVDT supply voltage and frequency variations
- Improved immunity to errors due to temperature effects on LVDT sensitivity
- Improved frequency and phase response
- Improved immunity to common-mode noise on LVDT lines
- Improved transducer interchangeability

Additionally, the sum of the secondary output voltages (Va + Vb) is nominally constant throughout the LVDT stroke range, so it can be used for system error detection in high integrity systems.

To operate in the ratiometric mode requires a five or six wire, centre-tapped LVDT specifically designed for the purpose, as with Penny+ Giles AF145 and AF111 LVDT's.

Penny+ Giles recommend the use of the SCM100 LVDT driver or DML300 LVDT Driver/Panel Indicator, which are specifically designed to operate in this mode.

Differential operation

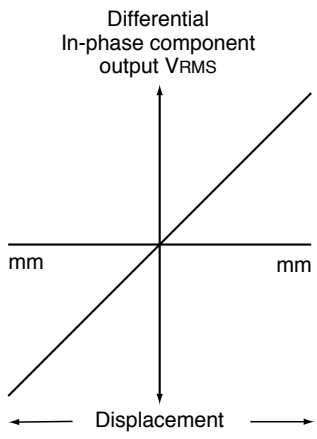

Fig E)

LVDT's are normally available with either four or five wires, where the extra wire is the centre-tap in the output. When operating in the differential mode, this centre-tap connection is often not used.

The output is taken across the whole transformer secondary, (see Fig. B). In this connection configuration, when the core is displaced from the centre null position, the output will increase in-phase with the input in one direction and anti-phase with the input in the other.

To derive the position from the LVDT, a modulator is required to provide the primary ac voltage in conjunction with a demodulator to translate the in-phase component transformer secondary output (Fig. E) to a dc signal proportional to position.

When using LVDT's in this differential mode the output will be directly affected by changes in supply voltage, operating temperature and supply frequency; and is therefore of lower accuracy.

Comparisons

LVDT's operating in the differential mode will typically provide a temperature coefficient of sensitivity of up to 500ppm/°C.

LVDT's which have been designed to operate in the ratiometric mode use specialist winding techniques which achieve figures almost an order magnitude better - typically as low as 12ppm/°C. This is comparable with linear potentiometers (20 to 40ppm/°C).

An additional major benefit of this special ratiometric winding technique is the reduced body-to-stroke length ratio for devices over 25mm stroke. Typically values of between 30 and 40% reduction in LVDT body length can be achieved using this technique.